SERIES 61K
High Resolution, 4-Pin

FEATURES
- 25, 32, 50, 64, 100, 128 and 256 Cycles per Revolution Available
- Sealed Version Available
- Rugged Construction
- Cable or Pin Versions
- 10 Million Life Cycles
- 300 RPM Shaft Rotation

DIMENSIONS In inches (and millimeters)

Pin Version

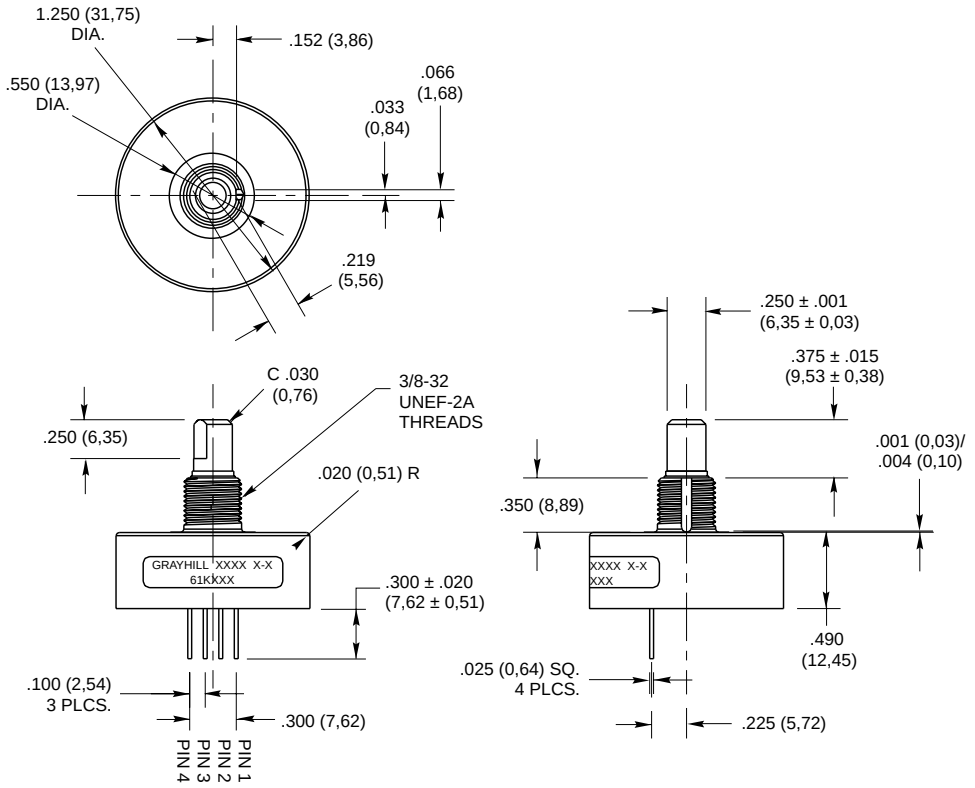

Unless otherwise specified, dimension tolerances are as follows: linear ± .010 (0,25), diameters ± .010 (0,25), angular ± .005 (0,13)

Call In CHINA (Beijing): Phone: (010)6851-9097, Fax: (010)6851-5578

DIMENSIONS In inches (and millimeters)

Cable Version

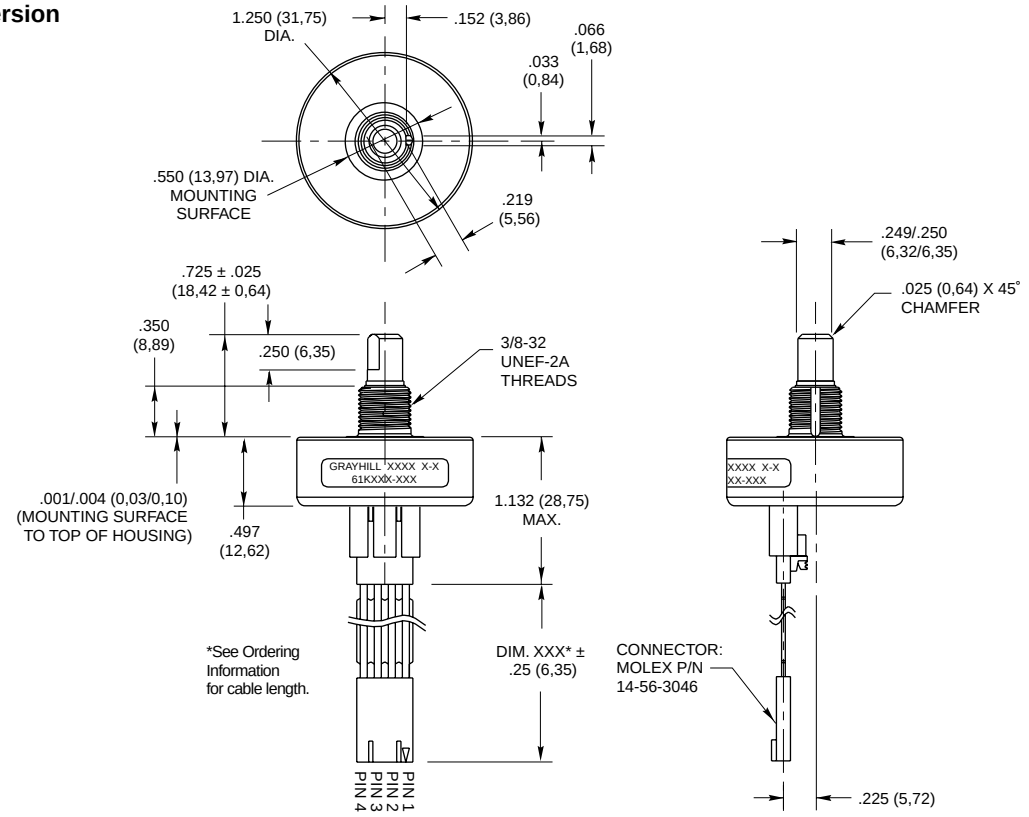

Unless otherwise specified, dimension tolerances are as follows: linear ± .010 (0,25), diameters ± .010 (0,25), angular ± 5°

CIRCUITRY, TRUTH TABLE, AND WAVEFORM: Standard Quadrature 2-Bit Code

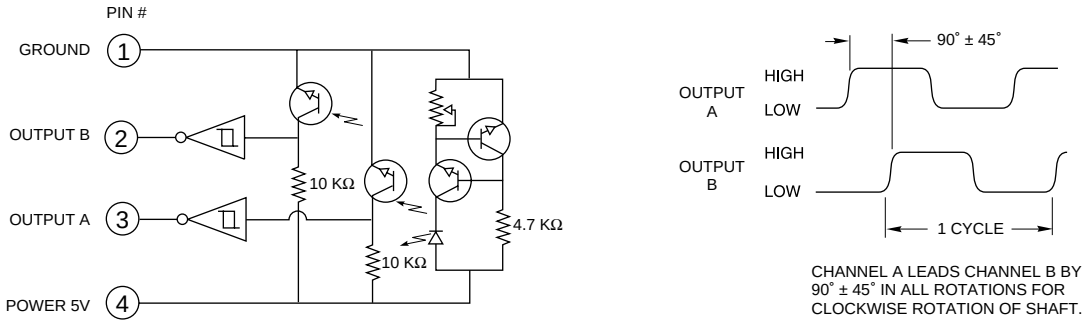

SPECIFICATIONS

Electrical Ratings

Operating Voltage: 5.0 ±.25 Vdc
Supply Current: 30 mA maximum at 5 Vdc
Logic Output Characteristics:
Output Type: Open collector with integrated Schmitt Trigger and 10K ohms pull-up resistor
Maximum Sink Current: 16 mA at .40 volts
Power Consumption: 150 mW maximum
Optical Rise Time: 500 nS typical
Optical Fall Time: 16 nS typical

Mechanical Ratings

Mechanical Life: 10 million revolutions
Time Life: Guaranteed for 10 years of continuous operation (calculated from emitter degradation data)
Mounting Torque: 20 in-lbs maximum
Shaft Push Out Force: 100 lbs
Terminal Strength: 5 lbs terminal pull-out force minimum
Solderability: 95% free of pin holes and voids
Operating Torque: 1.5 in-oz maximum (no detents) for unsealed versions

Environmental Ratings

Operating Temperature Range: -40°C to 85°C
Storage Temperature Range: -55°C to 100°C
Relative Humidity: 90-95% at 40°C for 96 hours
Vibration Resistance: Harmonic motion with amplitude of 15g, within a varied 10 to 2000 Hz frequency for 12 hours per MIL-STD-202, Method 204
Mechanical Shock: Test 1: 100g for 6 mS, half-sine wave with velocity change of 12.3 ft/s. Test 2: 100g for 6 mS, sawtooth wave with velocity change of 9.7 ft/s.

Materials and Finishes

See page E-23.

ACCESSORIES

See page E-23. For control knobs see page E-39.

ORDERING INFORMATION

See page E-23.

SERIES 61R

High Resolution, 5-Pin (Polarized Connection)

FEATURES

- 25, 32, 50, 64, 100, 128 and 256 Cycles per Revolution Available
- Sealed Version Available
- Rugged Construction
- Cable or Pin Version
- 10 Million Life Cycles
- 300 RPM Shaft Rotation
- Index Pulse Available

DIMENSIONS In inches (and millimeters)

Pin Version

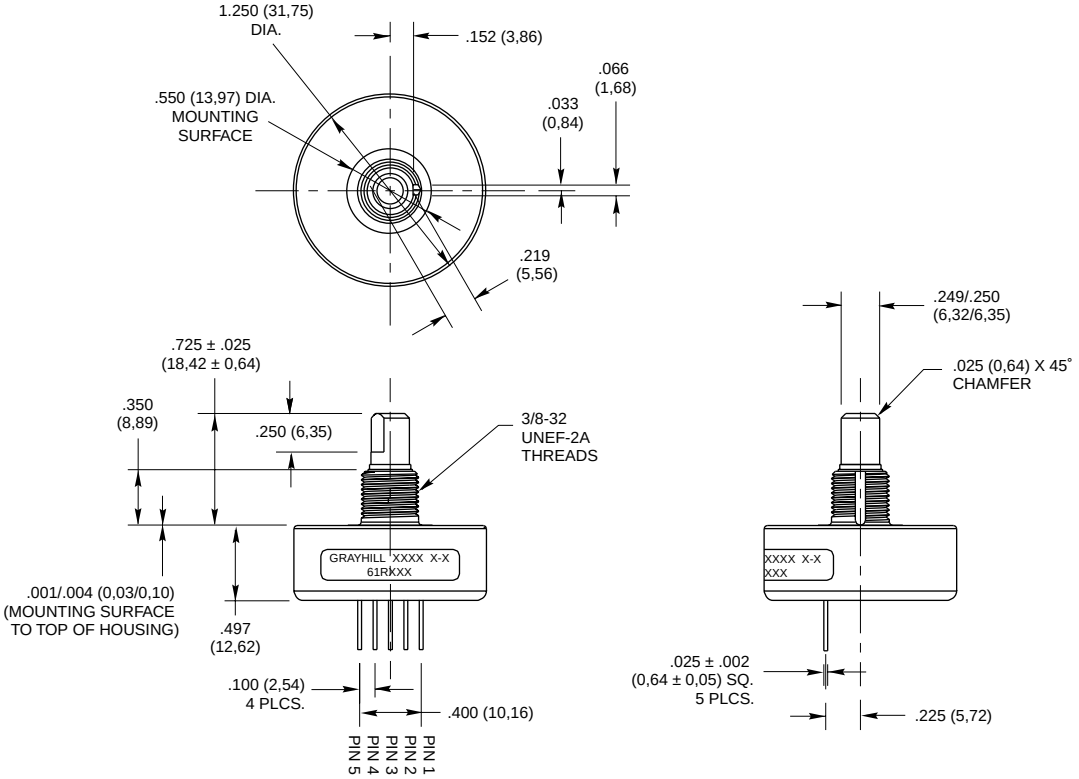

Unless otherwise specified, dimension tolerances are as follows: linear ± .010 (0,25), diameters ± .010 (0,25), angular ± 5°

Call In CHINA (Beijing): Phone: (010)6851-9097, Fax: (010)6851-5578

DIMENSIONS In inches (and millimeters)

Cable Version

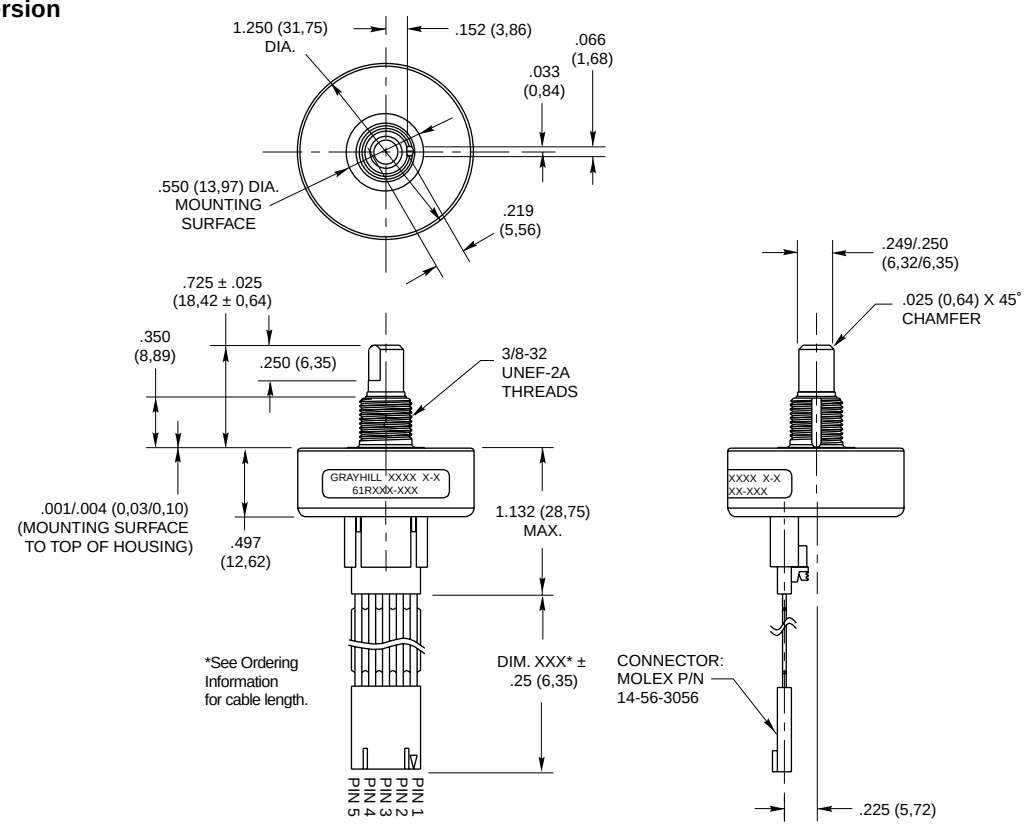

Unless otherwise specified, dimension tolerances are as follows: linear ± .010 (0,25), diameters ± .010 (0,25), angular ± 5˚

CIRCUITRY, TRUTH TABLE, AND WAVEFORM: Standard Quadrature 2-Bit Code

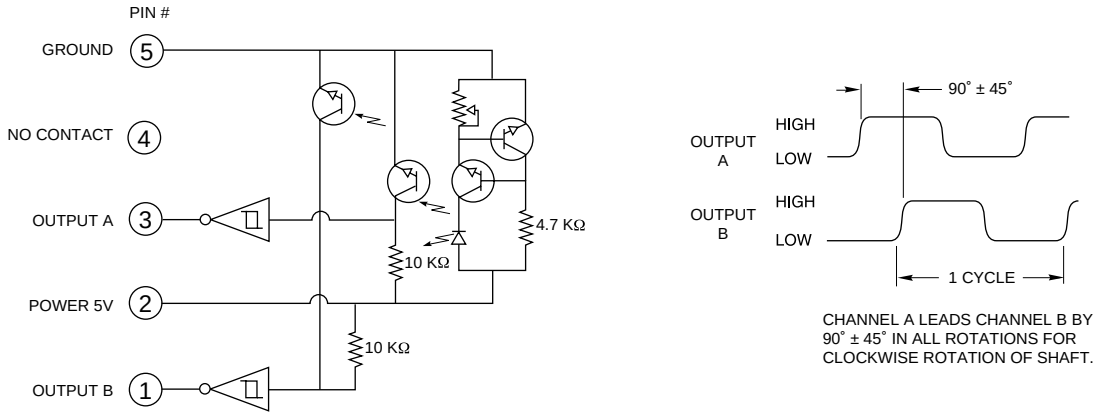

SPECIFICATIONS

Electrical Ratings

Operating Voltage: 5.0 ±.25 Vdc
Supply Current: 30 mA maximum at 5 Vdc
Logic Output Characteristics:
Output Type: Open collector with integrated Schmitt Trigger and 10K ohms pull-up resistor
Maximum Sink Current: 16 mA at .40 volts
Power Consumption: 150 mW maximum
Optical Rise Time: 500 nS typical
Optical Fall Time: 16 nS typical

Mechanical Ratings

Mechanical Life: 10 million revolutions
Time Life: Guaranteed for 10 years of continuous operation (calculated from emitter degradation data)
Mounting Torque: 20 in-lbs maximum
Shaft Push Out Force: 100 lbs
Terminal Strength: 5 lbs terminal pull-out force minimum
Solderability: 95% free of pin holes and voids
Operating Torque: 1.5 in-oz maximum (no detents) for unsealed versions

Environmental Ratings

Operating Temperature Range: -40°C to 85°C
Storage Temperature Range: -55°C to 100°C
Relative Humidity: 90-95% at 40°C for 96 hours
Vibration Resistance: Harmonic motion with amplitude of 15g, within a varied 10 to 2000 Hz frequency for 12 hours per MIL-STD-202, Method 204
Shock Resistance: Test 1: 100g for 6 mS, half-sine wave with velocity change of 12.3 ft/s. Test

2: 100g for 6 mS, sawtooth wave with velocity change of 9.7 ft/s.

Materials and Finishes

Bushing: Cast zinc, nickel-plated
Code Housing: Hiloy 610B
Shaft: Stainless steel
Rotor: Nylon
Retaining Ring: Stainless steel
Code Rotor and Aperture: Chemically etched stainless steel/electroformed nickel
Printed Circuit Board: NEMA Grade FR-4. Five microinches minimum gold over 100 microinches minimum nickel over copper
Optical Barrier: Polyphenylene sulfide, 94 V-0
Backplate: Polyester
Header: Phosphor bronze, 200 microinches tin over 50 microinches nickel (pin version only)
Infrared Emitter: Gallium aluminum arsenide
Photo IC: Planar silicon
Cable: 26 AWG, stranded/tinned wire, PVC coated on .100 (2,54) centers (cable version only)

ORDERING INFORMATION

61RS256 – 020

Series
Style: K = Standard, 4-pin, high resolution
KS = Sealed, 4-pin, high resolution
R = Standard, 5-pin, high resolution
RS = Sealed, 5-pin, high resolution
Cycles: per channel per revolution = 25, 32, 50, 64, 100, 128, 256

Termination:
Blank (no dash or numbers): pins as described in drawing.
Cable Termination: 020 = 2.0 inches minimum to 250 = 25 inches maximum Provided in increments of 1/2 inch. Example 035 = 3.5", 060 = 6". Cable is terminated with standard Molex part no. 14-56-3046 for 61K, 14-56-3056 for 61R. Use any standard .100 center 4-pin header for 61K, 5-pin header for 61R to interface with cable. Recommended to be mounted with Molex header part no. 70543-0003 or 70553-0003 for 61K, 70543-0004 or 70553-0004 for 61R.

Control knobs available, see page E-39.

Available from your local Grayhill Distributor. For prices and discounts, contact a local Sales Office, an authorized local Dstributor or Grayhill.

ACCESSORIES

Non-Turn Washer

The Series 61 bushing is 3/8 inches in diameter and has a non-turn keyway to prevent rotation of the switch body when the panel is cut to fit. Another way to keep the switch from turning is to use a non-turn washer. The washer is cadmium-plated brass.
Part number: **12C1087-1**
Part number: **SHH694-11,** 302-2B stainless steel, no plating

Shaft and Panel Seal

For shaft and panel seal version, the shaft is sealed by an o-ring inside the bushing. The panel is sealed by a flat gasket .045" thick at the base of the bushing. The panel seals will increase the behind panel dimension by .020" to .040", when the switch is mounted. The panel seal is silicon rubber.

DIMENSIONS In inches (and millimeters)

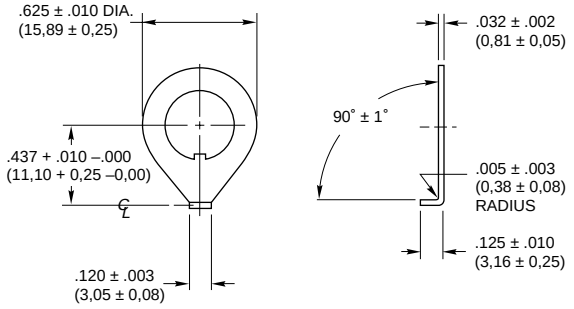

Part Number: **12C1087-1**

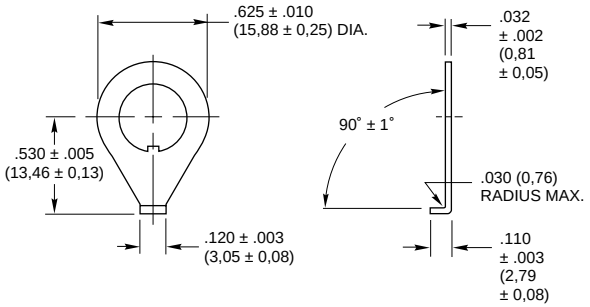

Part Number: **SHH694-11**