SERIES 25L

Hex, Gray and Quadrature Code

FEATURES

- Price Competitive to Similar Designs
- Quality Construction and Contact Materials
- Multiple Code and Indexing Choices
- 100,000 Life Cycles
- Less than 1.0" Square
- Manufactured to ISO 9001 Standards

DIMENSIONS In inches (and millimeters)

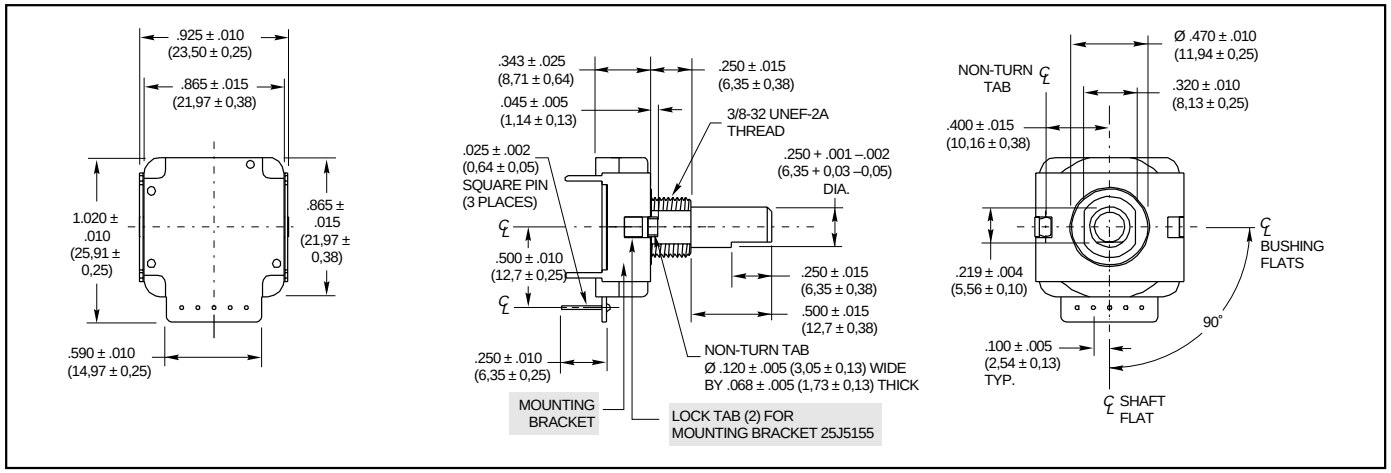

TRUTH TABLES

Clockwise Rotation

4-Bit Gray Code-16 Position

Switch Position	Code Position	Output 1	2	4	8
1	0				
2	1	●			
3	2	●	●		
4	3		●		
5	4		●	●	
6	5	●	●	●	
7	6	●		●	
8	7			●	
9	8			●	●
10	9	●		●	●
11	10	●	●	●	●
12	11		●	●	●
13	12		●		●
14	13	●	●		●
15	14	●			●
16	15				●

- Indicates closed circuit; blank indicates open circuit.

Clockwise Rotation

4-Bit Binary Code Hexadecimal-16 Position

Switch Position	Code Position	Output 1	2	4	8
1	0				
2	1	●			
3	2		●		
4	3	●	●		
5	4			●	
6	5	●		●	
7	6		●	●	
8	7	●	●	●	
9	8				●
10	9	●			●
11	10		●		●
12	11	●	●		●
13	12			●	●
14	13	●		●	●
15	14		●	●	●
16	15	●	●	●	●

- Indicates closed circuit; blank indicates open circuit.

Clockwise Rotation

Quadrature 2-Bit Code
1/4 Cycle per Detent

Switch Position	Output "A"	"B"
1		
2	●	
3	●	●
4		●
5		
6	●	
7	●	●
8		●
9		
10	●	
11	●	●
12		●
13		
14	●	
15	●	●
16		●
17		
18	●	
19	●	●
20		●
21		
22	●	
23	●	●
24		●
25		
26	●	
27	●	●
28		●
29		
30	●	
31	●	●
32		●
33		
34	●	
35	●	●
36		●

- Indicates closed circuit; blank indicates open circuit. Code repeats every 4 positions.

Quadrature 2-Bit Code
1/4 Cycle per Detent

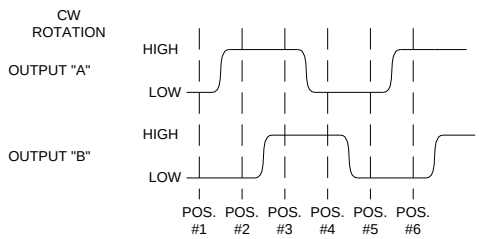

OUTPUT TABLE

SPECIFICATIONS

Electrical Ratings

Switching Loads: 1.5 mA at 115 Vac, resistive; 150 mA at 14 Vdc, resistive
Current Carrying Capacity: 250 mA maximum at 28 Vdc, resistive load
Contact Resistance: 75 mΩ, typical
Insulation Resistance: 1000 mΩ minimum between terminals
Voltage Breakdown: 1000 Vac minimum between terminals
Life Expectancy: 100,000 cycles of operation at rated loads. One cycle of operation is a rotation through all of the active positions and a return to the starting position.

Mechanical Ratings

Rotational Torque: 2 to 6 in-oz
Operating Temperature Range: -65C° to +85C°
Storage Temperature Range: -65 C° to +85 C°
Continuous Rotation: All standard switches are continuous rotation. Desired stop locations supplied upon request.
Anti-Rotation Device: Integral non-turn tab, flatted bushing, .375" diameter, .320 double "D" across flats.
Termination: Standard is PC style, parallel to shaft, facing rear. Options include PC, parallel to shaft, facing front; PC, perpendicular to shaft.
Panel Mounting Torque: 10 in-lbs maximum

Materials and Finishes

Bushing/Housing and Shaft/Rotor: Reinforced thermoplastic
Detent Ball: Stainless steel, nickel-plated
Detent Spring: Tinned music wire
Contacts: Beryllium copper, gold plate over nickel
Terminals: Copper alloy, CDA #725, solder plate over nickel
Output Board: FR-4, copper/nickel-plated
Mounting Hardware: Brass, cadmium-plated hex nut
Mounting Bracket: Stainless Steel, tin-plated

ORDERING INFORMATION

25LB10-Q-Z

Series: 25L = Economical, single deck encoder
Housing Color: B = Black housing*; R = Red housing
Angle of Throw: 10 = 10°, 36 positions; 11 = 11.25°, 32 positions;
15 = 15°, 24 positions; 18 = 18°, 20 positions;
22 = 22.5°, 16 positions; 30 = 30°, 12 positions;
45 = 45°, 8 positions

Mounting Bracket: Z = with bracket, Blank = no bracket
Code Output: H = Hexadecimal available only in 22.5°
G = Gray available only in 22.5°
Q = Quadrature (2-bit)

* Cadmium free

Custom materials, styles, color and markings are available. Custom knobs available, see page E-39.

Available from your local Grayhill Distributor. For prices and discounts, contact in CHINA(Beijing): Phone: (010)6851-9097,Fax:(010)68515578