Optical Encoder

Series 62N

1/2" Package, Non-turn, Dedicated Shaft

FEATURES

- Non-turn Pushbutton to Ensure Pushbutton Text and Orientation
- Seperate Pushbutton Function
- Low Cost
- Economical Size
- Optically Coupled for More than a Million Cycles
- Compatible with CMOS, TTL and HCMOS Logic
- Available in 16, 24, and 32 Detent Positions (Non-detent Also Available)
- Choices of Cable Length and Terminations

APPLICATIONS

- Global Positioning/Driver Information Systems
- Medical Equipment
- Cockpit Controls
- Mixing Boards

DIMENSIONS In inches (and millimeters)

Cable Version

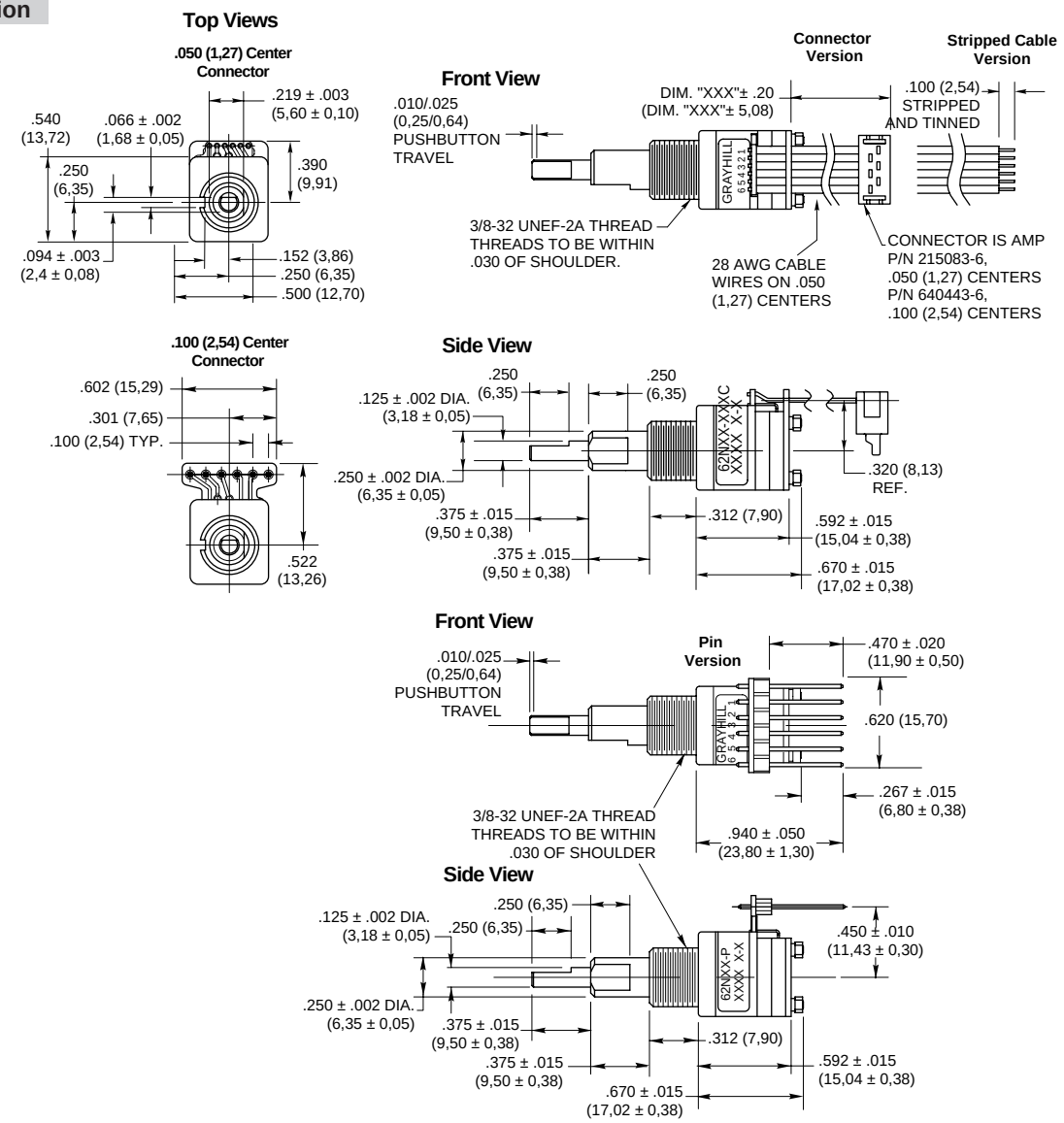

Unless otherwise specified, standard tolerances are ±0.10 (0,25)

Grayhill Optical Encoder Series 62N

1/2" Package, Non-turn, Dedicated Shaft

SPECIFICATIONS

Pushbutton Switch Ratings

Rating: at 5 Vdc, 10 mA, resistive
Contact Resistance: less than 10Ω (TTL or CMOS compatible)
Pushbutton Life: 3 million actuations minimum
Voltage Breakdown: 250 Vac between mutually insulated parts
Contact Bounce: less than 4 mS at make and less than 10 mS at break
Actuation Force: 1000 ±300g

Encoder Ratings

Coding: 2-bit quadrature coded output
Operating Voltage: 5.0 ±.25 Vdc
Supply Current: 30 mA maximum@5.0 Vdc
Logic Output Characterisitics:
Logic High: 3.8 Vdc minimum
Logic Low: 0.8 Vdc maximum
Mechanical Life: 1,000,000 cycles minimum (One cycle is a rotation through all positions and a full return)
Minimum Sink Current: 2.0 mA for 5 Vdc
Power Consumption: 150mW maximum
Output: open collector phototransistor
Logic Rise and Fall Times: less than 30 mS maximum
Operating Torque:
Detent: 2.0 in-oz ±70% initially
Non-Detent: less than 1.5 in-oz initially

Shaft Push Out Force: 45 lbs minimum
Mounting Torque: 15 in-lbs maximum
Terminal Strength: 15 lbs cable pull-out force minimum
Operating Speed: 100 RPM maximum

Environmental Ratings

Operating Temperature Range: -40°C to 85°C
Storage Temperature Range: -55°C to 100°C
Vibration Resistance: Harmonic motion with amplitude of 15G, within a varied 10 to 2000 Hz frequency for 12 hours
Mechanical Shock: Test 1: 100G, 6 mS, half sine, 12.3 ft/s; Test 2: 100G, 6 mS, sawtooth, 9.7 ft/s
Relative Humidity: 90–95% at 40°C for 96 hours

Materials and Finishes

Code Housing: Reinforced thermoplastic
Shafts: Aluminum
Bushing: Zinc casting
Shaft Retaining Ring: Stainless steel
Detent Spring: Stainless steel
Printed Circuit Boards: NEMA grade FR-4 gold over nickel or palladium

Terminals: Brass, tin-plated
Mounting Hardware: One brass, nickel-plated nut and stainless steel lockwasher supplied with each switch. Nut is 0.094 inches thick by 0.562 inches across flats
Rotor: Thermoplastic
Code Housing: Thermoplastic
Pushbutton Dome: Stainless steel
Dome Retaining Disk: Thermoplastic
Pushbutton Housing: Thermoplastic
Phototransistor: Planar Silicon NPN
Infrared Emitter: Gallium aluminum arsenide
Pushbutton Contact: Brass, nickel-plated
Flex Cable: 28 AWG, stranded/top coated wire, PVC coated on .050 or .100" centers (cabled version)
Header Pins: Phospher bronze, tin-plated
Spacer: Thermoplastic
Endcap: Thermoplastic
Non-turn Pin: Stainless steel
Backplate/Strain Relief: Stainless steel
Lockwashers: Stainless steel
Hex Nuts: Stainless steel
Studs: Stainless steel

CIRCUITRY, TRUTH TABLE, AND WAVEFORM Standard Quadrature 2-Bit Code

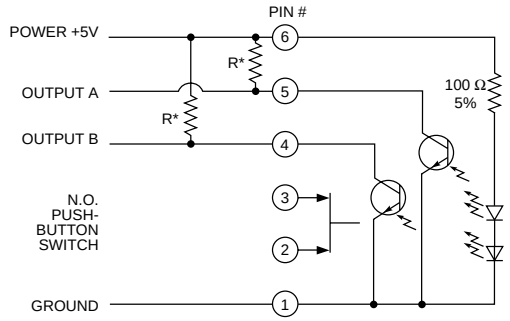

* External pull-up resistors required for operation (2.2 kΩ).

Clockwise Rotation

Position	Output A	Output B
1		
2	●	
3	●	●
4		●

● Indicates logic high; blank indicates logic low. Code repeats every 4 positions.

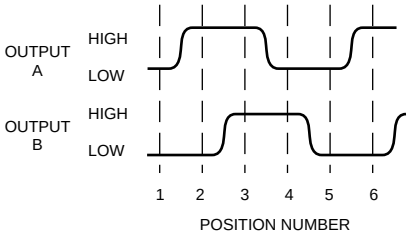

ORDERING INFORMATION

62N22-020S

Series and Style = 1/2" package, non-turn, dedicated shaft

Angle of Throw:

Detent	Non-detent
11 = 11.25° or 32 pos.	01 = 11.25° or 32 positions
15 = 15° or 24 positions	05 = 15° or 24 positions
22 = 22.25° or 16 positions	02 = 22.5° or 16 positions

Termination: S = Stripped cable; .050" centers
SH = Stripped cable; .100" centers
C = Connector; .050" centers
CH = Connector; .100" centers
P = Pin; .100" centers

Cable Length: 020 = 2.0 inches minimum to 250 = 25.0 inches maximum. Provided in increments of 1/2 inch. Example 035 = 3.5", 060 = 6.0".
**Eliminate cable length if ordering pins.* (Ex: 62N22-02-P)

These switches have Quadrature 2-bit code output and an optional shaft actuated pushbutton switch.

Custom materials, styles, colors, and markings are available. Control knobs available.

Available from your local Grayhill Component Distributor.

Bulletin #888
Original 08092001