Optical Encoders

Series 60A Joystick

FEATURES
- Optical Encoder, Pushbutton, and Joystick in One Shaft
- Long Life, High Reliability
- Compatible with CMOS, HCMOS, and TTL Logic
- Choices of Cable Length and Termination
- Customized Solutions Available

APPLICATIONS
- Global Positioning/Driver Information Systems
- Medical Equipment Control
- Radio Control
- Robotics
- Commercial Appliances

DIMENSIONS In inches (and millimeters)

Pin Version

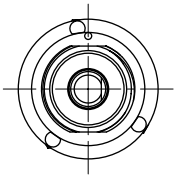

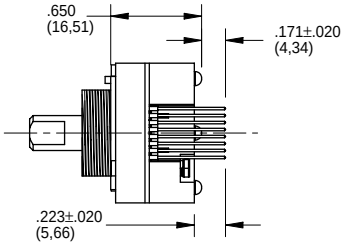

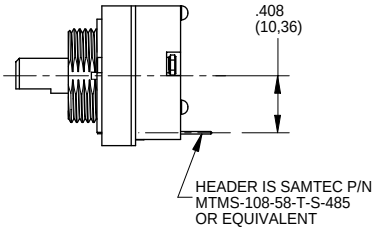

Cable Version **Top View** **Front View** **Side View**

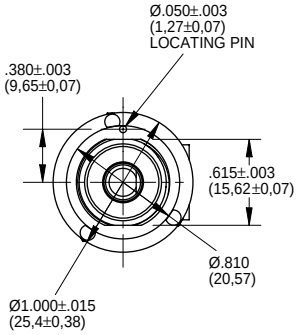

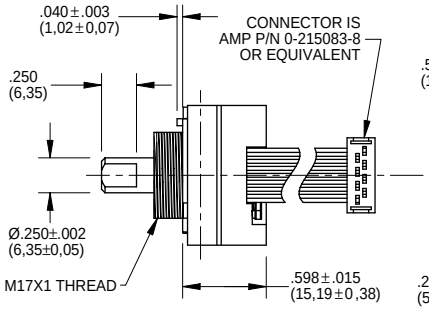

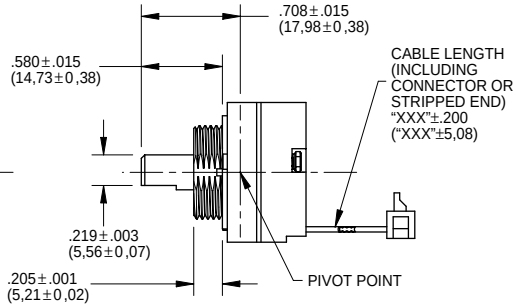

CIRCUITRY AND JOYSTICK OPERATION Standard Quadrature 2-Bit Code

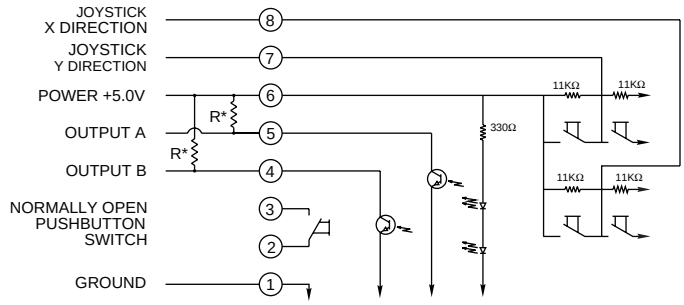

*EXTERNAL PULL-UP RESISTORS REQUIRED FOR OPERATION (2.2kΩ).

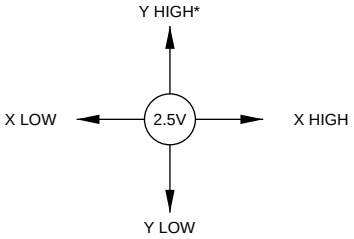

* DEFINED BY LOCATING PIN ON TOP OF HOUSING

WAVEFORM AND TRUTH TABLE Standard Quadrature 2-Bit Code

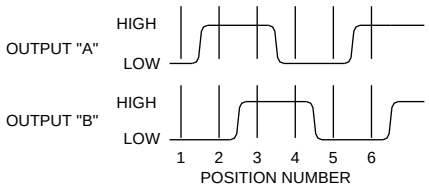

Clockwise Rotation		
Position	Output A	Output B
1		
2	●	
3	●	●
4		●

● Indicates logic high; blank indicates logic low. Code repeats every 4 positions.

SPECIFICATIONS

Rotary Electrical and Mechanical Ratings

Operating Voltage: 5.00 ± 0.25 Vdc
Supply Current: 20 mA maximum at 5 Vdc
Output: Open collector phototransistor. External pull up resistors are required
Output Code: 2-Bit quadrature, channel A leads channel B by 90° electrically during clockwise rotation of the shaft
Logic Output Characteristics:
High: No less than 3.5 Vdc
Low: No greater than 1.0 Vdc
Minimum Sink Current: 2.0 mA
Power Consumption: 100 mW maximum
Mechanical Life: 1 million rotational cycles of operation (1 cycle is a rotation through all positions and a full return)
Average Rotational Torque: 2.0 ± 1.0 in-oz initially, torque shall be within 50% of initial value throughout life
Mounting Torque: 15 in-oz maximum
Shaft Push-Out Force: 45 lbs minimum
Shaft Pull-Out Force: 45 lbs minimum
Terminal Strength: 15 lbs terminal pull-out force minimum for cabled and header termination
Solderability: 95% free of pin holes and voids

Pushbutton Electrical and Mechanical Ratings

Rating: 10 mA at 5 Vdc resistive
Contact Resistance: less than 10 ohms
Life: 1 million actuations minimum
Contact Bounce: < 4 mS make, 10 mS break
Actuation Force: 400 ± 150 grams force
Shaft Travel: 0.020 ± 0.010 inches

Joystick Electrical and Mechanical Ratings

Supply Current: 5 mA maximum
Output Code: 2-Bit
Logic Output Characteristics:
Neutral: 2.5 ± 0.5 Vdc
High: > 4.5 Vdc
Low: < 0.5 Vdc
Angle of Throw: 8° ± 2° in all directions
Life: 500,000 actuations in each direction

Environmental Ratings

Operating Temperature Range: -40°C to 85°C
Storage Temperature Range: -55°C to 100°C
Relative Humidity: 96 hours at 90-85% humidity at 40°C
Vibration: Harmonic motion with amplitude of 15g, within a varied 10 to 2000 Hz frequency for 12 hours
Mechanical Shock:
Test 1: 100g for 6ms half-sine wave with a velocity change of 12.3 ft/s
Test 2: 100g for 6ms sawtooth wave with a velocity change of 9.7 ft/s

Materials and Finishes

Assembly Studs: 305 Stainless steel
Detent Housing: Polyamide polymer (nylon 6/10 alloy)
Printed Circuit Boards: Glass cloth epoxy double clad with copper gold over nickel plated
Infrared Emitting Diode Chips: Gallium aluminum arsenide
Silicon Phototransistor Chips: Gold and aluminum alloys
Resistors: Metal oxide on ceramic substrate
Solder Pins: Phosphor bronze plated with tin/lead over nickel
Shaft: Polyamide polymer (nylon 6/10 alloy) with stainless steel insert
Detent Balls: Carbon steel plated with nickel
Detent Springs: Music wire plated with tin
Code Rotor: 33% Glass reinforced nylon 66
Pushbutton Dome: Stainless steel
Pushbutton Dome Retainer: Polycarbonate
Joystick Housing: Polyamide polymer (nylon 6/10 alloy)
Joystick Contact: Stainless steel, silicone rubber, brass with silver cladding, high-temp thermoplastic, phosphor bronze with silver cladding
Cable: Copper stranded with plating in PVC insulation
Connector: PA 4.6 with tin/lead plated phosphor bronze
Lockwashers: Stainless steel with passivate finish
Hex Nuts: 303 Stainless steel
Label: TT406 Thermal transfer cast film
Solder: 60/40 Tin lead, no clean, low residue flux
Mounting Nut: Polyurethane
Lubricating Grease: Nye nyogel 774L

OPTIONS

Contact Grayhill for custom terminations, rotational torque, number of positions, shaft configurations, and resolutions. Control knobs are also available.

ORDERING INFORMATION

60A18-4-020S

Series
Angle of Throw: Detent: 18 = 18° or 20 positions; Non-detent: 08 = 18° or 20 positions; Non-Turn: 00 = Joystick and Pushbutton only
Joystick Contacts: 2 = 2 Discrete Contacts
4 = 4 Discrete Contacts
8 = 4 Contacts in 8 possible directions

Termination: S = Stripped cable; .050" centers; C = Connector; .050" centers; P = Pin; .050" centers
Cable Length*: 020 = 2.0" minimum to 250 = 25.0" maximum. Provided in increments of 1/2". Example: 035 = 3.5", 060 = 6".
*Eliminate cable length if ordering pins (Ex: 60A18-4-P)

Available from your local Grayhill Component Distributor. For prices and discounts, contact a local Sales Office, an authorized local Distributor,In Beijing,CHINA, Phone: (010)6858-5001, Fax: (010)6851-9889 Http://www.hmcs.com.cn.